Rev.	Revision note	Date	Drawing By	Check By	Approved By
A	NEW DRAWING ISSUE	11/07/11	David		

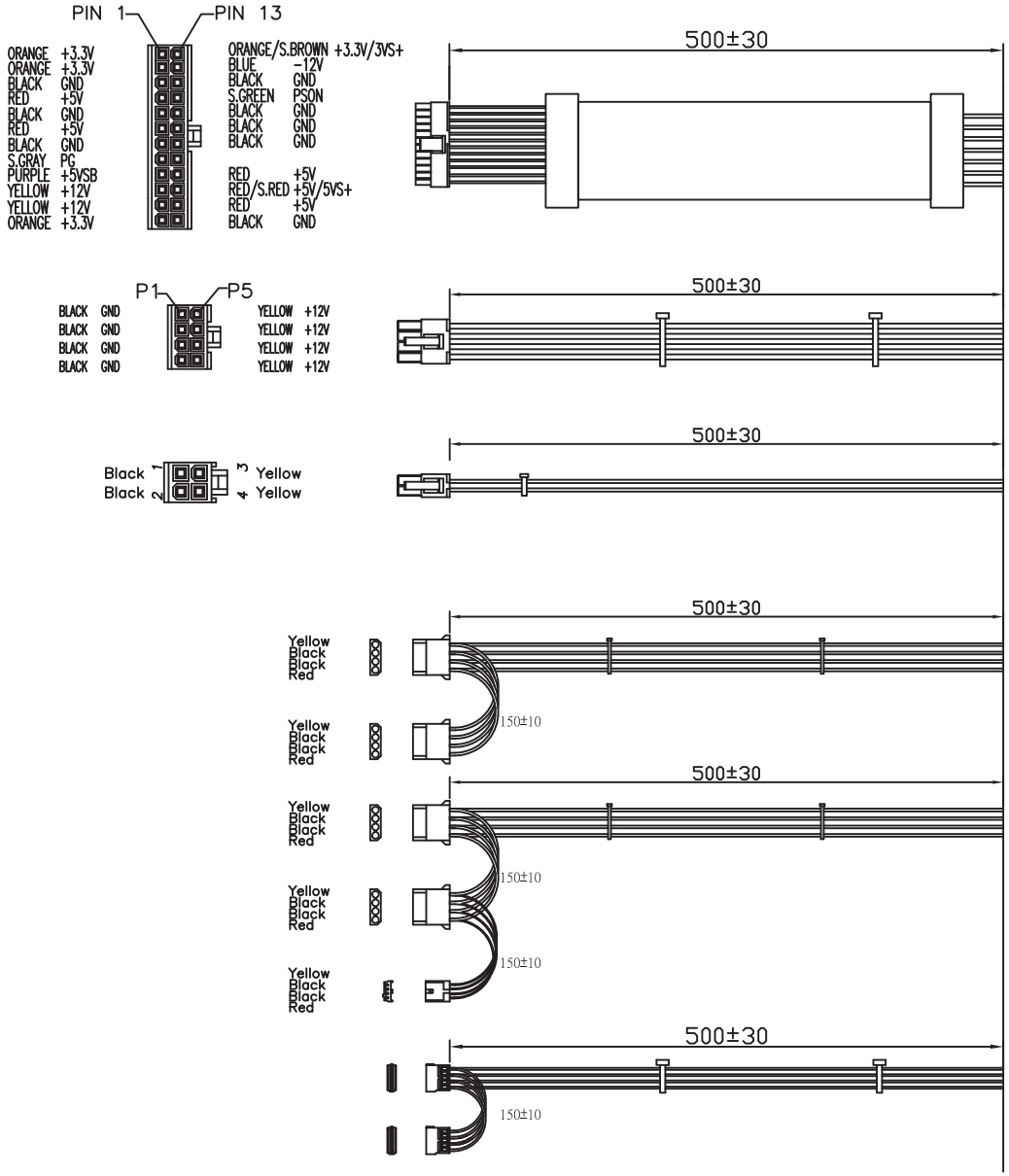

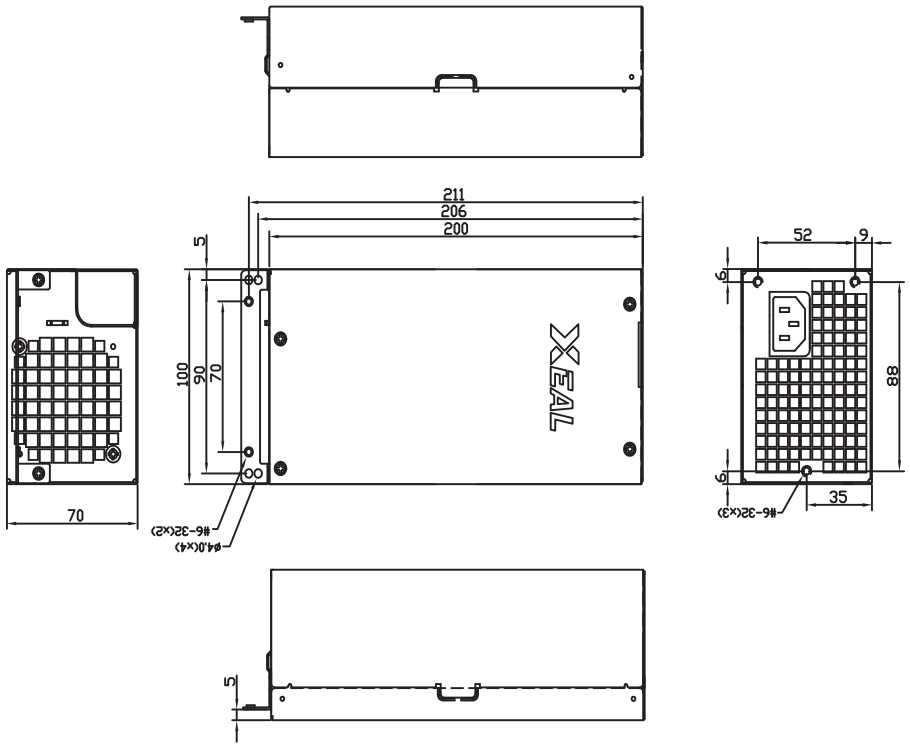

MODEL	NAME Wireharness	
IS-2UxxPD8	IS-2UPD8 series	XEAL
NOTES: TOLERANCE TO BE FOLLOWINGS UNLESS OTHERWISE BE SPECIFIED	MATERIAL	
LENGTH: ALL — TOLERANCE: +5/-0mm	FINISH	UNIT mm SCALE 1/1
	PART NO.	SHEET 1 OF 1
	MANUFACTURE NUMBER	DRAWING NO.