iStarUSA®
Powered by iStarUSA® Group

Model NO	M-4160-ATX
Ext	3.5"x16, ODDx1
	2.5"x2 (*custom size)
(*optional T-C25HD HDD cage)	
Hid	2.5"x1, 2.5"x2
M/B	12"x9.6"
Fan	12CMx3
	6 CMx2 (optional)
Slot	7

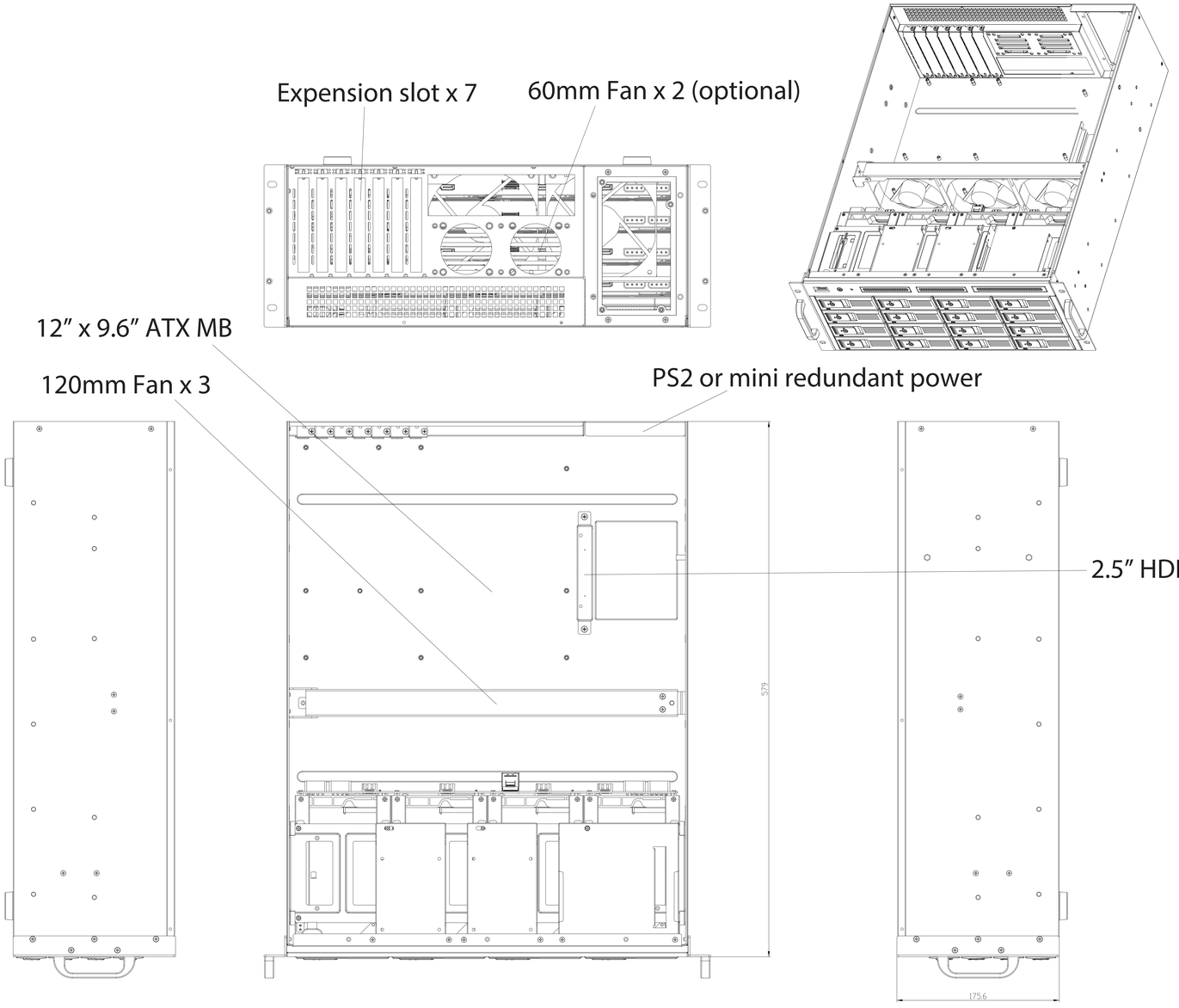

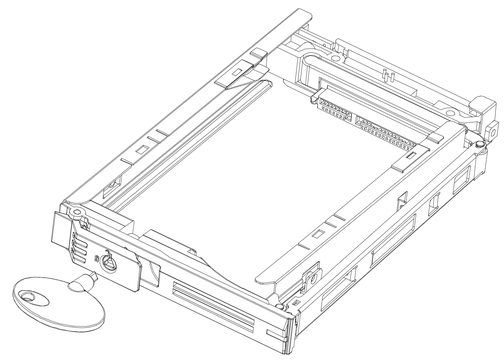

T-C25HD

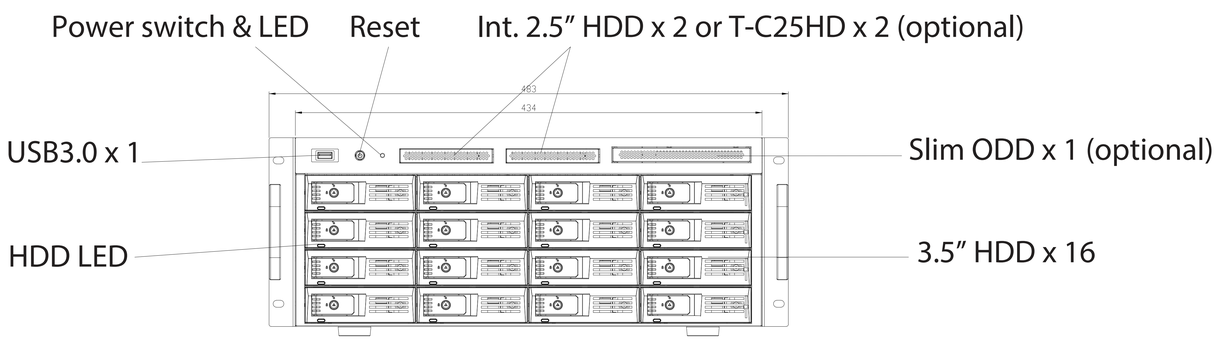

iStarUSA® Powered by iStarUSA® Group				MODEL NAME.	M-4160-ATX
GENERAL TOLERANCE	0-15->±0.10 15-150->±0.2 150-300->±0.3 300-500->±0.5	PROJECT CODE	*	PART NO.	*
DSN: *	Sep-29-14	MATERIAL: TBD		PART NAME	*
CHK:		FINISH: N/A			
APPD:		SCALE: 1:0.5	UNIT: mm	SHEET:1 of 1	SIZE: A0 VER: *